EPC-B35882025-TM

TM AI+ Training Server
Pre-installed TM AI+ Training Software

Features

- **Intel Core i7 1.9G 24M 16C 1700P i7-13700E**
- **UDIMM DDR5 4800 32G RAM *2PCS**
- **2.5” 2TB SSD Storage**
- **500W Power Supply Built-in**
- **Include NVIDIA Quadro RTX A4000H 16G PCI-E x16 Graphic Card**
- **Ubuntu OS License**
- **Ready for TM AI+ Training Software**

TMPlug&Play CERTIFIED

Specifications

Model Name		EPC-B3588
Motherboard		AIMB-588Q-00A1
Dimensions (W x H x D)	Dimensions (W x H x D)	310 x 133.35 x 360 mm
System Thermal Design	CPU Cooler	CPU cooler
	PSU	500W
	System Fan	2
Environmental Conditions	Operating Temperature	0 ~ 50 °C (w/o Graphic card), 0 ~ 45 °C (with RTX-A4000H)
	Non-operating Temperature	-20 ~ 60 °C
	Humidity	95% @ 40 °C, non-condensing
	Operating Shock	10G/11ms
	Operating Random Vibration (5 ~ 500 Hz)	1.0Grms (w/o Expansion Cards)
CPU	CPU	i7-13700E
Chipset	Chipset	Q670E
Storage	Storage Bay	2.5" 2T SSD
Front IO	Power switch	1
	LED	1 Power LED 1 HDD LED
	Power remote Jack	1 2.5Φ Jack
Rear IO (By Motherboard)	Display ports	HDMI x1, DP x2
	USB	1 USB3.2 Gen2 x2 Type C; 5 USB 3.2 Gen2 type A; 4 USB 2.0 type A
	LAN	2 RJ45 GbE (1 2.5GbE, 1 GbE)
	Audio	1 Mic-in, 1 Line-out
Certification	EMC / Safety / Certifications	CE / FCC (Class B) / CCC / CB / UL
Power Requirements		500W ATX / AT mode
Weight	Weight	15 Kg
PCIE Expansions		1 PCIE x16 2 PCIE x4

Dimensions

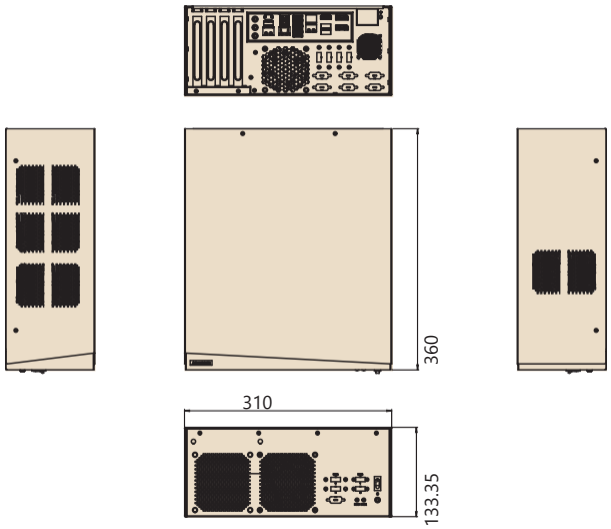

Front View

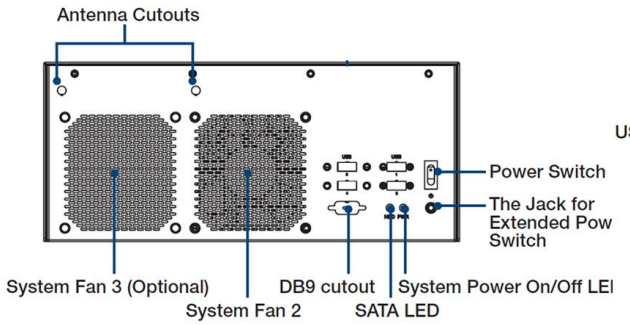

Rear View

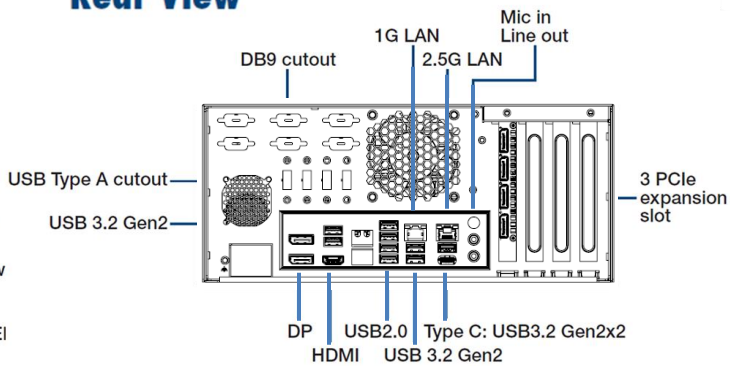

Ordering Information

Model	PSU	Chipset	DDR5 UDIMM	2.5" SATA Bay	Rear IO							Expansion	
					Display Port	HDMI	2.5 GbE	GbE	USB3.2 Gen2 x2	USB3.2 Gen1	USB2.0	PCIE x4	PCIE x16
EPC-B35882025-TM	500W	Q670E	32G *2	2T SSD	2	1	1	1	1	5	4	2	1

Packing List

Item	Part Number	Description
Power Cable	1702002600	Power cable 3-pin 183cm, USA type
	1702002605	Power cable 3-pin 183cm, EU type
	1702031801	Power cable 3-pin 183cm, UK type
	1700000237	Power cable, 3-Pin 183cm, Japan type

Embedded OS/API

OS/API	Part Number	Description
Ubuntu	968MOU204D	Ubuntu 22.04